To Reduce Spikes
on the EMU

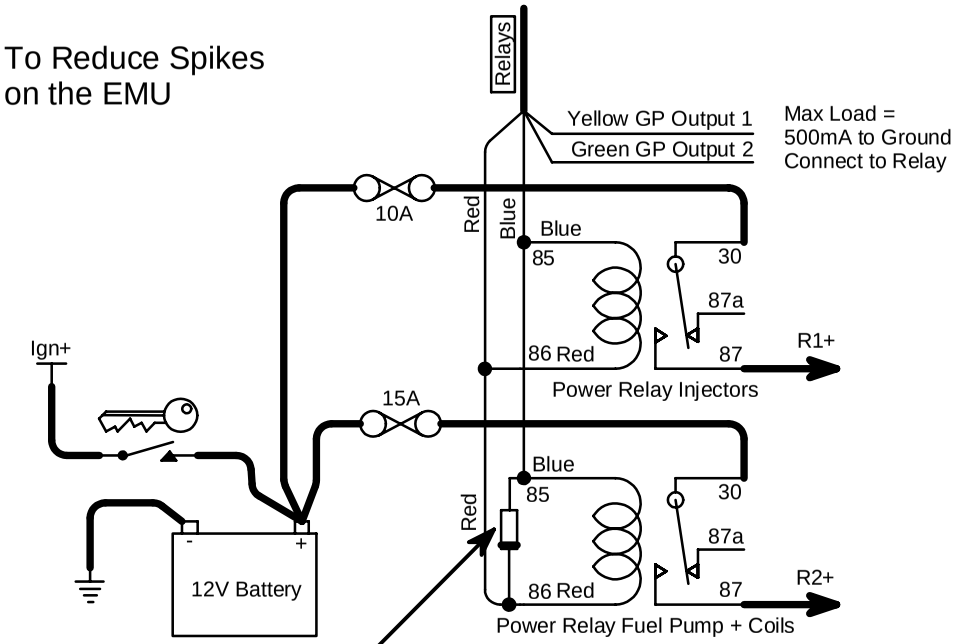

NB!! Connect the Diode with the stripe to the red wire.